Automated Testing of HVAC Systems for Commissioning

Tim Salsbury and Rick Diamond
Lawrence Berkeley National Laboratory
Berkeley, CA 94720

Synopsis

This paper describes an approach to the automation of the commissioning of HVAC systems. The approach is based on software that generates a sequence of test signals to exercise systems while under closed-loop control. The test signals are in the form of setpoint changes that exercise considered systems at strategic operating points. The software contains simple models, which are used to select the setpoints in the test sequence. Indices, calculated over a pre-determined monitoring period following each change in setpoint, characterize system performance. These indices are compared with ideal values in order to assess performance and diagnose important commissioning faults. The paper presents results from testing the approach on a simulation of a dual-duct air-handling unit installed in a federal building in San Francisco.

About the Authors

Tim Salsbury works in the Indoor Environment department at Lawrence Berkeley National Laboratory where he is involved in several projects concerned with developing ways to improve building operations. Rick Diamond is a staff scientist at Lawrence Berkeley National Laboratory where he manages research on building performance and design assistance for new and retrofit projects.

Introduction

The performance of many HVAC systems is limited more by poor installation, commissioning, and maintenance than by poor design (Liu, 1997; Piette, 1996; Schexnayder *et al.*, 1997). Commissioning is often carried out poorly in practice for the following reasons:

- Limited time and resources available to undertake rigorous testing
- Shortage of skilled personnel
- Difficulty in defining performance criteria for the commissioning process

An important part of the commissioning process involves carrying out a proof of operation. In large modern buildings, the energy management and control system (EMCS) is used to exercise the various systems in the building to verify: electric and hydraulic connectivity, correct balancing, and proper installation. The potential exists to automate this part of the commissioning process to address the problems listed above. The benefits of an automated approach to commissioning are:

- Allows testing on systems in parallel, thereby reducing overall testing time
- Automates the labor-intensive aspects of commissioning, thereby freeing engineers to deal with problems identified by the tests

- Facilitates conformance testing and use of pre-determined test standards and performance targets

Automated commissioning involves analyzing system performance in order to detect and diagnose problems (faults) that would affect the operation of the system during normal use. A considerable amount of research work has been carried out over the last seven years on fault detection and diagnosis (FDD) in HVAC systems, much of it in the International Energy Agency Annexes 25 and 34 (e.g. Hyvärinen and Kärki, 1996). Some research on automated testing at the commissioning stage has also been performed (Buswell *et al.*, 1997; Haves *et al.*, 1996). Commissioning and FDD during normal operation are two topics that are closely related.

This paper describes an automated commissioning tool based on simple models. The tool is simple to configure and has the potential to detect system problems during the commissioning phase that would severely restrict performance during normal operation. Benefits are energy savings, improved occupant comfort and the avoidance of costly maintenance during operations.

Automated Commissioning Concept

Figure 1 shows the automated commissioning tool concept. The idea is to use software to perform a sequence of commissioning tests on HVAC equipment via the EMCS. Although the figure shows the software residing in a laptop PC, the software could reside equally well in the EMCS itself. Communication between the commissioning tool and EMCS is achievable in various ways. Possibilities include direct on-site connection, dedicated modem access, or a wide area network, such as the Internet. The versatility of the communications opens the way for multi-building testing from a single location.

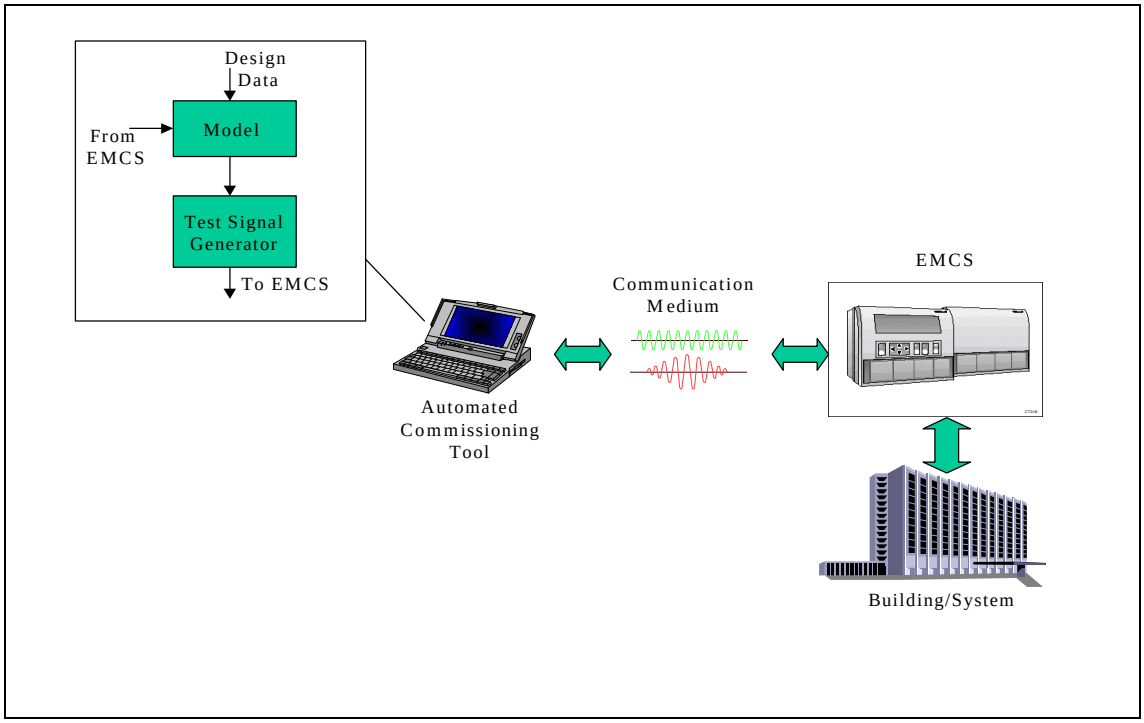

Figure 1: Automated commissioning tool concept

Simplified models form the main part of the commissioning tool. Configuration of the models requires physical information about the considered system(s), obtainable from design specifications. Measurements of sensor and control signals from the EMCS allow the models to predict system performance for a given set of environmental conditions. Test signals for exercising the considered HVAC system(s) are then generated based on model predictions. The tool monitors the behavior of the system in response to the test signals and characterizes performance using a number of indices.

Models

The commissioning tool is applied to an air-handling unit containing three thermal subsystems: heating coil, cooling coil, and mixing box. Models of these three subsystems are thus embedded in the tool. The models make use of simple energy and mass balances and predict only the full load performance of the treated systems. The models predict heat exchanger performance using the *number of transfer unit* (NTU) method (e.g. Incropera and De Witt, 1990). The use of simplified models of this sort reduces the number of configurable parameters enabling the models to be configured from typically available design specifications. This approach encourages propagation of information through life cycle processes and opens the way for interoperability between software programs. Table 1 lists the configuration parameters required by the three models used in the commissioning tool. Note that the model of the cooling coil in the commissioning tool is capable of treating latent heat transfer providing the humidities of the relevant air stream are measured and available through the EMCS.

Table 1: Parameters required by subsystem models

PARAMETER/DESIGN SPECIFICATIONS	UNITS
HEATING/COOLING COIL	
Heat transfer rate	kW
Cold fluid inlet air temperature	^{o}C
Cold fluid mass flow rate	kgs^{-1}
Hot fluid inlet temperature	^{o}C
Hot fluid mass flow rate	kgs^{-1}
MIXING BOX	
Minimum fractional outside air flow	%

Test Signals

The commissioning tool generates a sequence of test signals, which are in the form of setpoint changes. The object is to exercise a considered system at the following three strategic operating points while it is under closed loop control:

- Minimum-load
- Half-load
- Full-load

The tool generates setpoints in order to force the controlled system to each of the above three operating points. Setpoints that force the controlled system to a diagnostically significant operating point have been termed “landmarks” by Glass *et al.* (1994). The setpoints are

calculated using the embedded models and are expected, based on the models representing design performance, to cause the system to reach steady state at each of the three operating points. The minimum-load point tests for closing problems in valves and dampers. Half-load point tests for non-linearity due to poor balancing or mismatched components; and full-load point tests capacity and whether the equipment is capable of meeting design loads.

Performance Assessment

A pre-determined period is allotted after each change in setpoint to allow the system to reach steady state. After this period, the tool calculates two indices over a shorter period when the system is expected to already be in steady state. These indices are: average control signal, and mean absolute error (MAE).

The average control signal is the mean of the control signals issued by the controller over the calculation period. The mean absolute error (MAE) is the mean of the absolute differences between the setpoint and the controlled variable over the same period. Ideally, the mean absolute error would be zero as all setpoints are in the controllable range of the systems. However, in practice, a zero error is not always realizable due to noise effects and inaccuracies inherent in the tool itself; a tolerance is therefore required on this index. In ideal conditions, the average control signal would be zero for the “minimum-load” setpoint, 50% for the “half-load” setpoint, and 100% for “full-load”. Again, a tolerance on these ideal values is required to cater for non-fault inaccuracies in the process. The idea is to detect and diagnose faults in the system under test by comparing index values calculated from the tests with the ideal values.

Test System

Figure 2 shows the dual-duct air-handling unit used to demonstrate the potential of the automated commissioning tests. In the unit, air dampers controlled by an economizer, mix return-air from the building with outside-air in order to maintain a mixed-air temperature setpoint. A large supply fan blows the mixed-air through both the hot- and cold-deck ducts.

The control of the supply fan maintains the average of the hot and cold ducts at a fixed static pressure setpoint. The supply fan speed varies in order to counteract changes in duct system resistance brought about by dampers opening and closing in VAV terminal units. Two fans installed in the return duct have their speeds tracked to the speed of the supply fan. The hot and cold ducts each house a heat exchanger with controllers configured to maintain setpoints by modulating control valves. The hot-duct heat exchanger has a two-port valve and the cold-duct a three-port valve. The air-handling unit has the capacity to deliver 74kg/s of air and provide 850kW of heating and 1260kW of cooling.

A simulated version of the system depicted in Figure 2 was used to test the automated commissioning tool. The simulated system was developed in the MATLAB environment using models similar to those found in the computer simulation program HVACSIM+ (Clark, 1985). Tests were carried out on the three thermal subsystems in the air-handling unit: heating coil, cooling coil, and mixing box. The fan control loop was not tested and was therefore disabled during the tests with the fan fixed at its maximum speed. Measurements of outside and return air temperatures from the real building in San Francisco were used as boundary conditions in the simulated system in order to provide realistic disturbances during the tests.

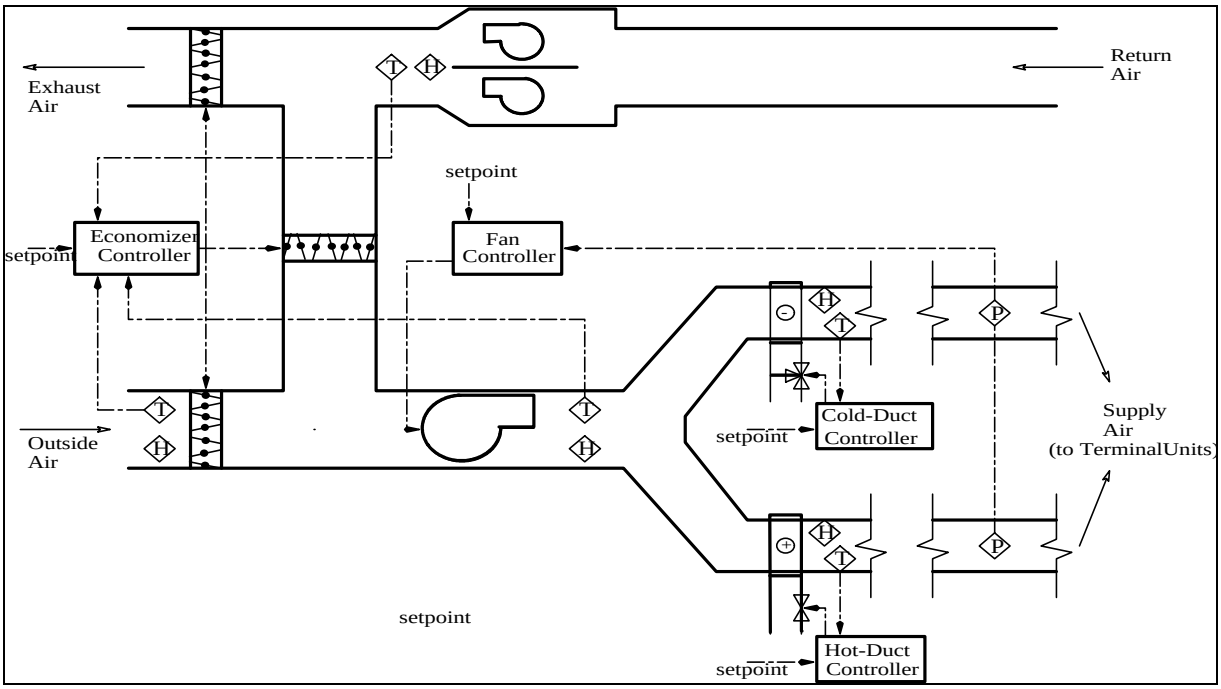

Figure 2: Schematic of the dual-duct air-handling unit. "T" indicates a temperature sensor, "H" a humidity sensor, and "P" a static pressure sensor.

Example Results

This section describes the tests carried out on the simulated air-handling unit depicted in Figure 2. The three strategic setpoints that form the commissioning test sequence were issued to each of the three thermal subsystems while under *closed-loop control* in order to drive the subsystems to the expected control signals listed in Table 2. The advantage of performing testing under a closed-loop regime is that this allows the simultaneous evaluation of both control performance and system operation.

Table 2: *Expected* control signals for the demanded setpoints. Note that indices in bold indicate figures pertinent to a particular test.

TEST NUMBER	EXPECTED CONTROL SIGNAL (%)		
	MIXING	COOLING	HEATING
1	**100**	**0**	**0**
2	100	0	**50**
3	100	0	**100**
4	**50**	0	0
5	**0**	**50**	0
6	0	**100**	0

The table shows the steady state control signals expected for each of the issued setpoints. More detailed explanations of each of the six tests listed in Table 2 are given below.

Test Number 1: During this test, all subsystems are issued with setpoints expected to drive them to their minimum operating points. Note that in the case of the mixing box, full outside-air (at 100% control signal) is taken to be the minimum operating point. Large MAE values for any of the subsystems may imply failure of a device to shut-off completely.
Test Number 2: Heating coil set to its half-load point. The control signal is expected to be near 50% for this setpoint. If the control signal is significantly different from 50%, the coil is non-linear, implying incorrect balancing or inappropriate equipment selection/installation.
Test Number 3: Heating coil issued with a setpoint expected to correspond to maximum capacity. A large MAE at this setpoint would indicate insufficient capacity, while a control signal significantly below 100% would indicate an oversized coil (compared with the original design specifications).
Test Number 4: Mixing controller issued a setpoint expected to drive the dampers to their mid-operating point. Large differences between the calculated value and the expected 50% control signal would imply excessive non-linearity and may indicate future problems with controllability.
Test Number 5: Cooling coil tested at mid-operating point in order to evaluate linearity. Again, large differences between the control signal and the expected 50% imply possible controllability problems.
Test Number 6: Cooling coil tested at its maximum-load point. A large MAE at this setpoint would indicate insufficient capacity, while a control signal significantly below 100% would indicate over-sizing.

Note that high MAE values for any of the above tests may also indicate poor tuning of the controllers. Visual evaluation of the control response could be used to verify this possibility during the tests.

Correctly Operating System

The commissioning tests are first carried out on the simulated system in its correctly operating condition. Figure 3 shows the results of the tests 1-6.

The top graph in the figure shows the three controlled temperatures in the air-handler (solid lines) and their setpoints (dashed lines). The lower graph shows the control signals to each of the three subsystems. Each change in setpoint is held for 20 minutes with the last 5 minutes of the period used to calculate the average MAE and control signal values. Only the last 5 minutes of each test are used to calculate the indices since, ideally, the system is expected to be in steady-state during this time.

Table 3 lists the indices calculated for each of the six tests on the correctly operating system. The indices in bold are those pertinent for each particular test. All MAE values are low, only the heating coil test at maximum capacity leads to a MAE value of more than one Kelvin. A difference of one Kelvin from the ideal value is not significant enough to imply a serious problem with the capacity of the heating coil. Comparison of the mean control signals with the ideal values listed in Table 2 shows that the cooling coil in the simulated system has a slightly greater capacity than expected. The results of tests at the mid-operating points show that the

heating coil and mixing box correlate well with the expected control signals of 50%. The results imply that the cooling coil has a more non-linear characteristic.

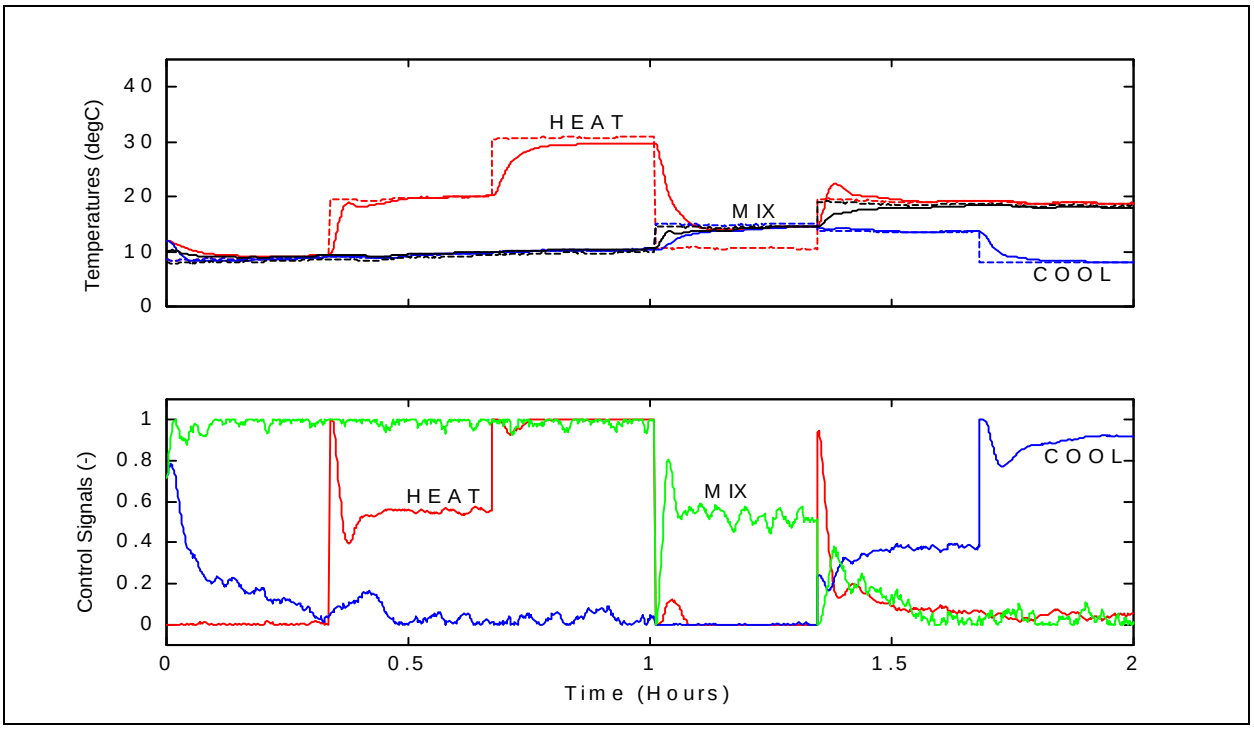

Figure 3: Commissioning test on correctly operating system.

Table 3: Results of tests on correctly operating system. Note that indices in bold indicate figures pertinent for a particular test.

Test Number	Average Control Signal (%)			Mean Absolute Error (K)		
	Mixing	Cooling	Heating	Mixing	Cooling	Heating
1	**99**	**7**	**0**	**0.7**	**0.2**	**0.3**
2	99	2	**55**	0.6	0.1	**0.1**
3	98	2	**100**	0.5	0.2	**1.3**
4	**52**	0	0	**0.1**	0.7	4.0
5	**2**	**38**	7	**0.4**	**0.0**	0.1
6	2	**92**	5	0.3	**0.0**	0.1

Reverse Acting Heating Coil Valve

A reverse-acting actuator is a typical commissioning fault caused usually by incorrect setting of the directional switch on the actuator. Despite the major effect on performance of this fault, anecdotal evidence and the authors' personal experiences have revealed that this problem is not uncommon.

Figure 4 shows the temperatures and control signals from the tests on the air-handling unit with the reverse-acting heating valve. In this case, visual inspection of the graphs immediately shows that a problem exists with the heating subsystem.

Table 4 lists the indices calculated from the tests. The first test in the sequence, corresponding to the minimum operating point check, reveals a problem with the heating coil subsystem due to an excessively large MAE value. Tests 2 and 3 also indicate a problem stemming from large MAE values. The fault may be distinguished from other faults having similar symptoms, such as a stuck actuator, by the fact that the MAE is almost equal to the maximum gain of the heating coil at each operating point extremity.

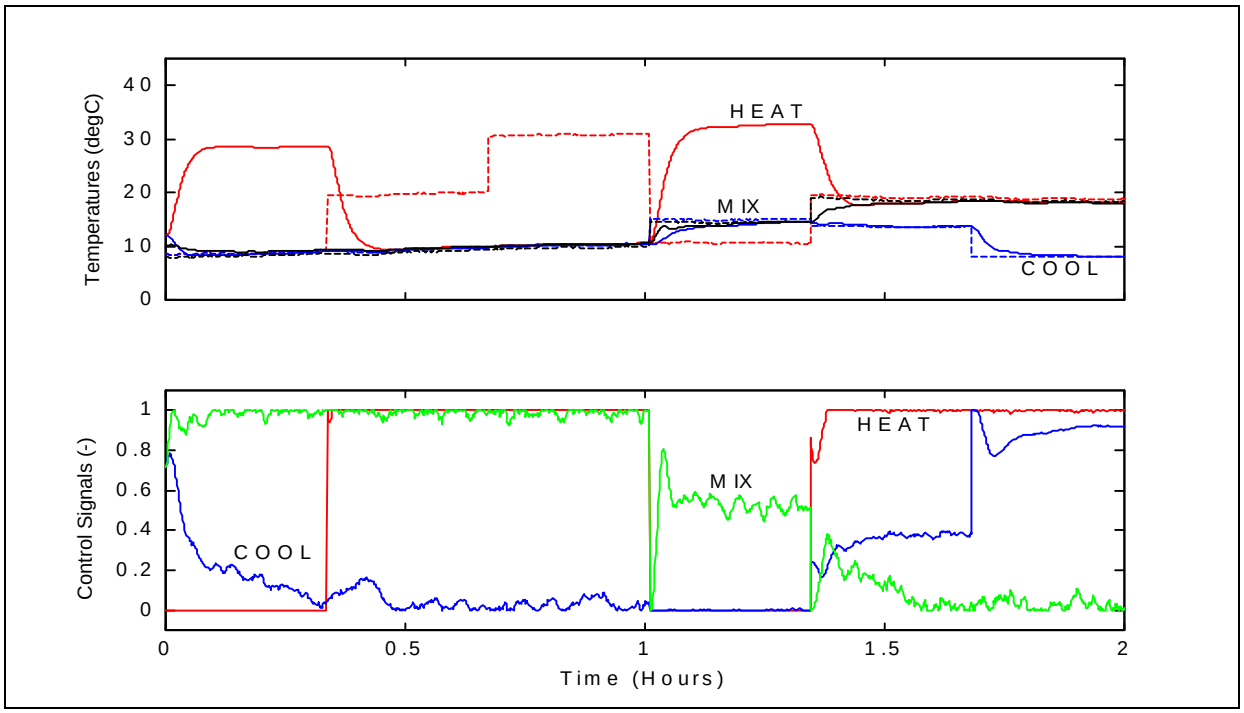

Figure 4: Commissioning test on system with reverse acting heating valve.

Table 4: Results of tests on system with reverse acting heating valve. Note that indices in bold indicate figures pertinent for a particular test.

TEST NUMBER	AVERAGE CONTROL SIGNAL (%)			MEAN ABSOLUTE ERROR (K)		
	MIXING	COOLING	HEATING	MIXING	COOLING	HEATING
1	**99**	**7**	**0**	**0.7**	**0.2**	**19.6**
2	99	2	**100**	0.6	0.1	**10.2**
3	98	2	**100**	0.5	0.2	**20.4**
4	**52**	0	0	**0.1**	0.7	22.2
5	**2**	**38**	93	**0.4**	**0.0**	0.1
6	2	**92**	100	0.3	**0.0**	0.6

Disconnected Re-circulation Damper Actuator

A common problem in the installation process is to forget to tighten linkages between actuators and control elements. When this happens for only one of the dampers in a mixing box, the effect is not so easy to detect, as the fault does not cause a failure of the system but instead changes its behavior. Figure 5 shows the results from the tests on the simulated system with the re-circulation damper stuck at 50% open. The figure shows that this fault prevents the controller from reaching the mixed air setpoint at all three operating point tests.

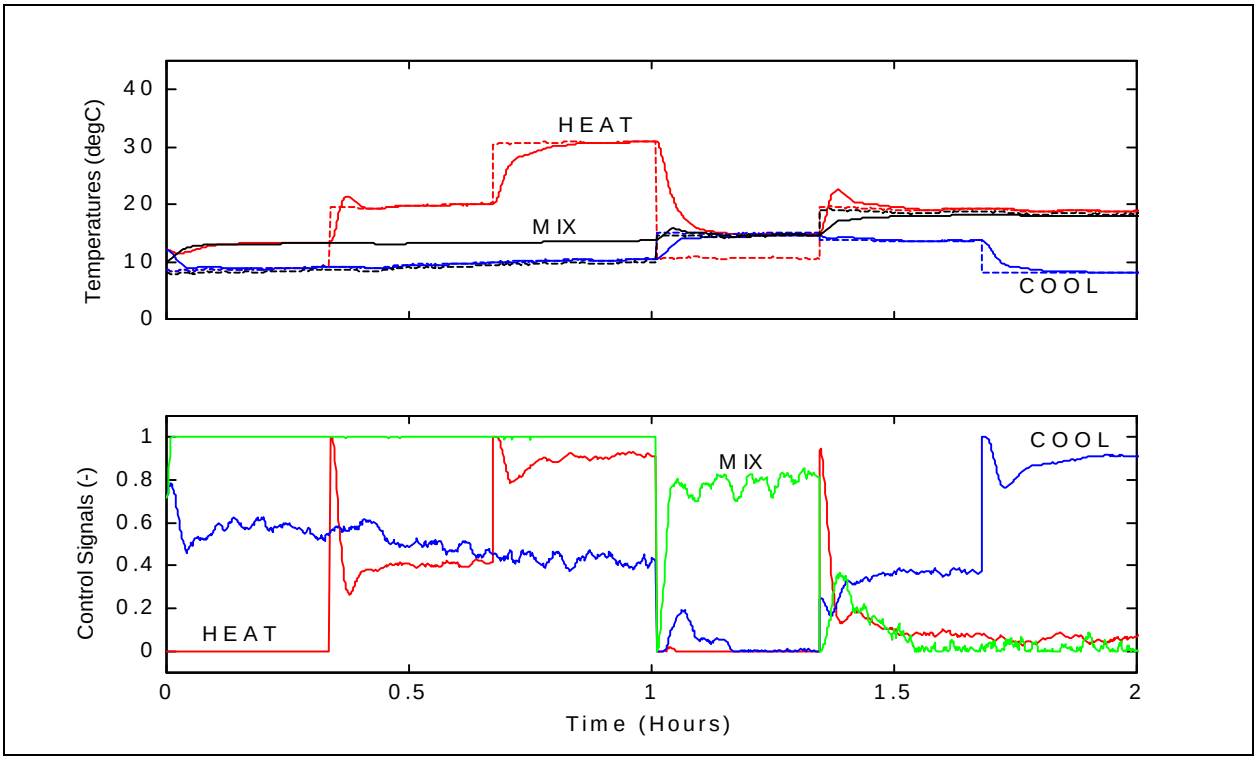

Figure 5: Commissioning test on system with disconnected re-circulation damper.

Table 5: Results of tests on system with disconnected re-circulation damper. Note that indices in bold indicate figures pertinent for a particular test.

Test Number	Average Control Signal (%)			Mean Absolute Error (K)		
	Mixing	Cooling	Heating	Mixing	Cooling	Heating
1	**100**	**56**	**0**	**4.7**	**0.1**	**4.3**
2	100	47	**41**	4.0	0.1	**0.1**
3	100	41	**92**	3.7	0.1	**0.1**
4	**82**	0	0	**0.1**	0.5	4.2
5	**1**	**37**	8	**0.6**	**0.0**	0.1
6	1	**91**	6	0.4	**0.0**	0.1

Table 5 lists the indices calculated from the tests. Most of the tests indicate differences between the index values and their ideal values. A superficial comparison of the table of results with the

ideal values may imply faults in all subsystems. However, it is possible to isolate the problem to the mixing box by making use of the knowledge that the mixing box precedes the other subsystems in the air-handler. Any problems with the mixing box therefore affect other units upstream in the air-handling unit. The first test shows a MAE of 4.7K when the mixing box should be delivering full outside air, indicating the possibility of unwanted re-circulation. Test 4 provides corroborative evidence for unwanted additional re-circulation as the control dampers reach steady state at a position of 82% when they are expected to be at 50%. Based on consideration of these test results, it is possible to narrow a diagnosis to leakage through the re-circulation damper.

Misplaced Cold-Duct Temperature Sensor

Another problem that is commonly encountered in systems that have been inadequately commissioned is that of misplaced sensors. In this test, the simulation is set up so that the sensor that is supposed to measure the temperature in the cold-duct is instead measuring the plant room temperature. The fault thus represents the case where a sensor has not been inserted in the ducting. Figure 6 shows the results from the tests with the misplaced sensor. The figure shows that the controller is unable to attain the setpoint when any load greater than zero is demanded from the cooling coil. Other systems are not affected since the cooling coil does not precede any other device.

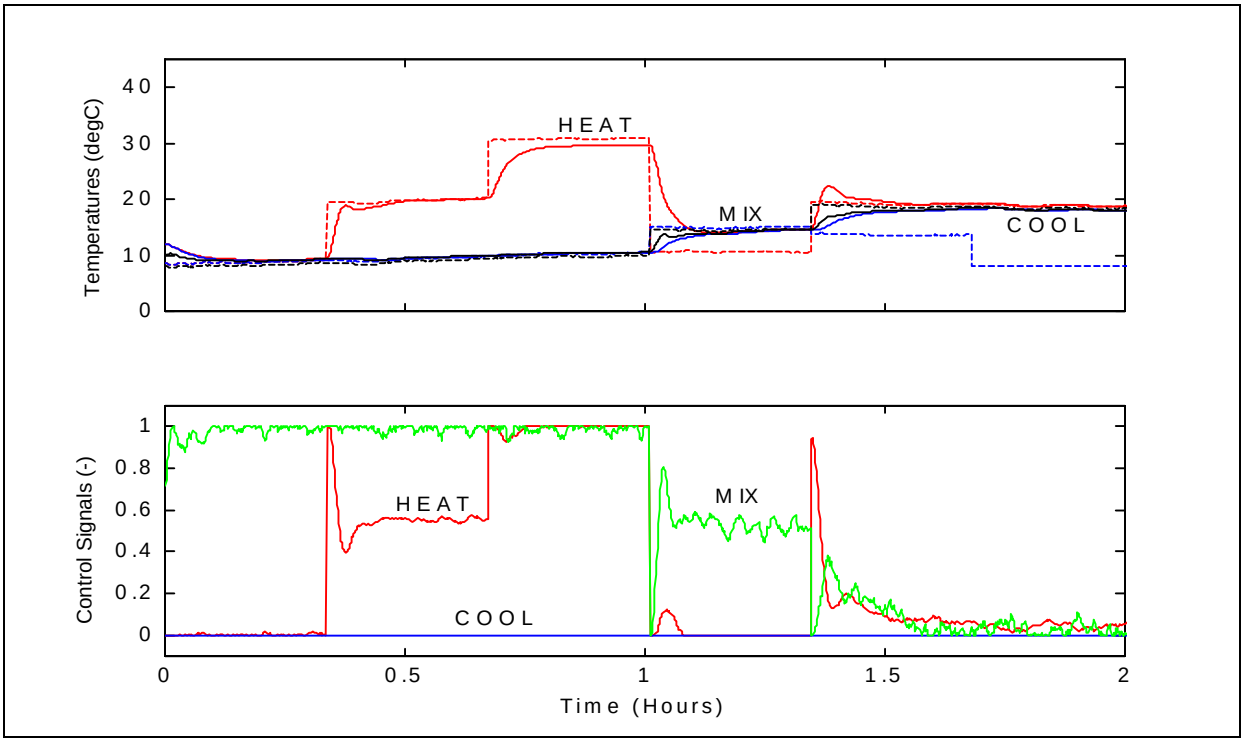

Figure 6: Commissioning test on system with misplaced temperature sensor.

Table 6 listed the indices calculated from the tests on the air-handler with the misplaced temperature sensor. The results show that when the cooling coil is supposed to operate at mid load (test 5) the average control signal is calculated to be zero. The MAE value at this operating point is also excessive, indicating a problem. Test 6 corroborates the evidence of a fault in the

cooling process with both the average control signal and the MAE value differing significantly from the ideal values. Consideration of the MAE values at each setpoint can be used to infer a lack of response in the controlled variable in order to narrow the diagnosis.

Table 6: Results of tests on system with misplaced temperature sensor. Note that indices in bold indicate figures pertinent for a particular test.

TEST NUMBER	AVERAGE CONTROL SIGNAL (%)			MEAN ABSOLUTE ERROR (K)		
	MIXING	COOLING	HEATING	MIXING	COOLING	HEATING
1	**99**	**0**	**0**	**0.7**	**0.1**	**0.3**
2	99	0	**55**	0.6	0.1	**0.1**
3	98	0	**100**	0.5	0.1	**1.3**
4	**52**	0	0	**0.1**	0.6	4.0
5	**2**	**0**	7	**0.4**	**4.5**	0.1
6	2	**0**	5	0.3	**10.0**	0.1

Conclusions

This paper has described an approach for carrying out automated tests on HVAC systems to assist in the commissioning process. We presented a method for testing HVAC system performance while under closed loop control. A sequence of test signals caused the controlled system to be exercised at strategic operating points. Simple indices, calculated during the tests, were used to assess performance and diagnose problems. We tested the method on a simulated dual-duct air-handler and demonstrated that the techniques have the potential to detect and diagnose a number of important faults.

The techniques described in the paper are capable of generating the sequence of test signals and of calculating indices useful for diagnostics. In the paper, diagnoses were made heuristically by comparing the table of indices generated from a test sequence with ideal values. Great potential exists to automate this process in order to generate diagnostics automatically as part of the tests. One way in which to achieve this is to use an expert system, based on rules, to evaluate test results and compare with the ideal values. This idea is a natural extension to the tool described in the paper and related work by the author and co-workers (Haves *et al.*, 1996) has demonstrated the viability of coupling a fuzzy rule-base to a similar commissioning tool. Appropriate thresholds also need defining for the indices in order to allow the automatic generation of diagnostics. Thresholds play an important role in automated diagnostics and their selection should be based on the inherent inaccuracy in the tool and the sensitivity to faults required in the scheme.

Acknowledgements

This work was supported by the Assistant Secretary for Energy Efficiency and Renewable Energy, Office of Building Technology and Community Systems, and the Federal Energy Management Program, of the US Department of Energy under Contract No. DE-AC03-76SF00098. The authors would like to thank Philip Haves, Robert Hitchcock, and Mary Ann Piette for their contributions to this paper.

References

ASHRAE. 1995. “Standard 135-1995 - BACnet - A Data Communication Protocol for Building Automation and Control Networks”. Published by ASHRAE.

Buswell, R., P. Haves, T. I. Salsbury. 1997. “A model-based approach to the commissioning of HVAC systems”. Proceedings of the CLIMA 2000 conference, Brussels.

Clark, R. C. 1985. “HVACSIM+ Building Systems and Equipment Simulation Program Reference Manual”. Published by the U.S. Department of Commerce, National Bureau of Standards, National Engineering Laboratory, Center for Building Technology, Building Equipment Division, Gaithersburg, MD 20899.

Glass, A. S., P. Gruber, M. Roos, and J. Todtli. 1994. “Preliminary Evaluation of a Qualitative Model-Based Fault Detector for a Central Air-Handling Unit”. Proceedings of 3rd IEEE Conference on Control Applications, Glasgow.

Haves, P., D. R. Jørgensen, T. I. Salsbury, A. L. Dexter. 1996. “Development and Testing of a Prototype Tool for HVAC Control System Commissioning”. *ASHRAE Transactions*. Number 102. Part 1.

Hyvärinen, J., S. Kärki. “Building Optimization and Fault Diagnosis Source Book”. August 1996. ISBN 952-5004-10-4.

Incropera, F., D. P. De Witt. 1990. “Introduction to Heat Transfer”. Published by John Wiley and Sons, Inc.

Liu, M., Claridge, D., Haberl, J., and D. Turner, "Improving Building Energy System Performance by Continuous Commissioning," Proceedings of the Fifth National Conference on Building Commissioning, April 28-30, 1997, Long Beach, CA.

Piette, M.A. and B. Nordman, 1996. "Costs and Benefits of Utility Funded Commissioning of Energy-Efficiency Measures in 16 Buildings," ASHRAE Transactions, Atlanta, GA, Vol. 102, Pt 1. Feb. 1996, LBNL-37823.

Schexnayder, A., Lunneber, T., and Ring, E., "Energy Resource Center Commissioning Results", Proceedings of the Fifth National Conference on Building Commissioning, April 28-30, 1997, Long Beach, CA.